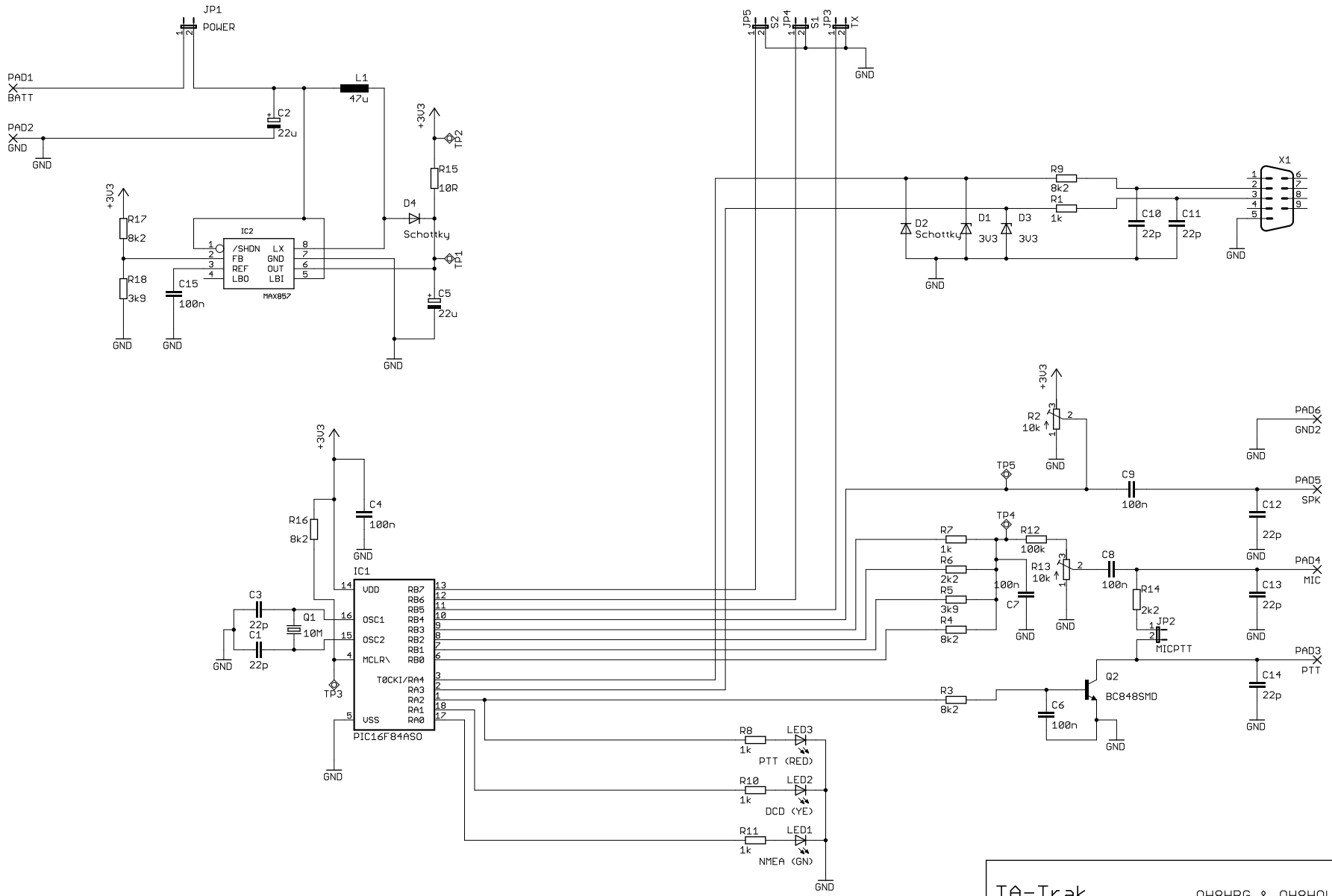

TA-Trak	OH8HBG & OH8HQL 2004
TITLE: ta-trak	
Document Number:	REV: 2.0
Date: 4/06/2004 09:40:32	Sheet: 1/1